เอกสารแนบ 6

เอกสารสอบเทียบเครื่องมือที่ใช้ในการวิเคราะห์

ENTECH
Where Solutions Begin

Calibration Certificate

NSC-TISI-TIS 17025 CALIBRATION 0157

Certificate No. : T/O 660198

The Reference Standard Instrument :-

Instrument	Model	Serial No.	Cert No.	
1) Data logger with RTD Probe	Agilent 34972A	MY41187730	PSL-T 0651-1/66	21-Apr-2024
		MY60008352	PSL-T 0651-3/66	21-Apr-2024

Measured room conditions

Temperature :	Minimum:	30.8 °C	Maximum:	31.9 °C
Humidity :	Minimum:	50.7 %RH	Maximum:	57.2 %RH
Voltage :	Minimum:	219.8 VAC	Maximum:	223.4 VAC
Fresh Air Setting:	off			

Sensor Position :

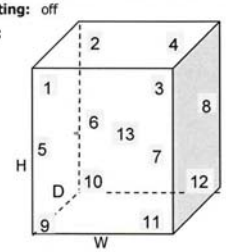

Working Space of chamber :

(Inside Dimensions) W x D x H : 1560 mm x 500 mm x 1380 mm

Sensor Installation Details :

- Sensor Number 1 to 12 installed approximately 50 mm From each wall.
- Sensor Number 13 installed approximately geometric of the chamber.

Results : The measurement results of the calibration were reported in the table below.
(*) Without adjustment ( ) After adjustment

UUC* Setting	UUC* Reading	Temperature Reading oF Standard Sensor								
		Sensor Position								
(°C)	(°C)	1	2	3	4	5	6	7	8	9
4.0	4.1	4.02	4.35	4.01	4.20	4.37	4.22	4.17	4.39	4.05
		Sensor Position								
		10	11	12	13					
		4.29	4.30	4.28	4.19					

UUC* Setting	UUC* Reading	Temperature Uniformity	Temperature Stability	Overall Variation	Uncertainty of Measurement	Coverage Factor
(°C)	(°C)	(°C)	(± °C)	(°C)	(± °C)	K
4.0	4.1	1.19	1.08	2.47	1.5	2

UUC* = Unit Under Calibration

Remark :-

- Temperature reading of Standard Sensors shown in the table were taken from the average of Standard reading at each position.
- Temperature Uniformity was calculated from the difference between the maximum and minimum of actual temperature reading from all reference sensors at the same time.
- Temperature Stability was calculated from the maximum stability of nine positions, and formula of Stability is [(Maximum Temperature Value - Minimum Temperature Value) /2]
- Overall Variation was calculated from the difference between the maximum and minimum measured temperature throughout observation time.

End of Report

Entech Industrial Solution Co.,Ltd.
17/121 Soi Ngamwongwan 47 Yaek 48, Toongsonghong, Laksi, Bangkok 10210 THAILAND Tel. 0-2779-8888 Calibration@entech.co.th
Tax ID : 0105536035591 www.entech.co.th

ENTECH
Where Solutions Begin

Calibration Certificate

NSC-TISI-TIS 17025 CALIBRATION 0157

Certificate No.: T/O 660198
Date of issue : 11-Oct-2023

Equipment Description	:	Refrigerator
Equipment Model	:	P1010
Equipment Serial No.	:	P1010-1020-0005
I.D. No. or Control No.	:	TNP.LAB.01
Manufacturer	:	Entech Industrial Solution Co.,Ltd.
Customer Name	:	TNP ENVIRONMENT CO.,LTD.
Customer Address		332/173 Moo. 3 Tambon Bang Rak Phatthana, Amphoe Bang Bua Thong,
	:	Nonthaburi 11110
Total pages of certificate	:	2 pages
Instrument Receiving Date	:	9-Oct-2023
Receiving No.	:	O-230230
Environmental Conditions	:	All of the measurement were carried out in the working area
		Temperature : (25 ± 15) °C
		Humidity : (55 ± 30) % RH
		Voltage : (220 ± 22) VAC
Calibration Place	:	332/173 Moo. 3 Tambon Bang Rak Phatthana, Amphoe Bang Bua Thong,
		Nonthaburi 11110
Calibration Procedure No.	:	This instrument was calibrated by comparison of reference radiation source standard
		according to calibration work instration no WI-CL-18-C

The calibration certificate expended uncertainty of measurement is stated as the standard uncertainty of measurement multiplied by the coverage factor k, which for a normal distribution corresponds to a coverage probability of approximately 95%

The standard uncertainty of measurement has been determined in accordance with M 3003 The expression uncertainty and confidence in measurement.

This certificate is applied only to item under test environmental condition.

This calibration certificate may not be reproduced other than in full except with the permission of the issuing laboratory. Calibration certificates without signature and seal are not valid.

This calibration certificate documents are traceability to national standards, which realize the unit of measurement according to the International system of units (SI).

Date of Calibration : 9-Oct-2023

[redacted]

Entech Industrial Solution Co.,Ltd.
17/121 Soi Ngamwongwan 47 Yaek 48, Toongsonghong, Laksi, Bangkok 10210 THAILAND Tel. 0-2779-8888 Calibration@entech.co.th
Tax ID : 0105536035591 www.entech.co.th

CALIBRATION LABORATORY CO., LTD.
2/10-11,14,55 Soi Prasert Manukit 29 Yaek 4, Prasert Manukit Rd., Ladphrao, Bangkok 10230
Tel. 02-578-0353-4 Fax: 02-578-2672 www.cal-laboratory.com E-mail:sale@cal-laboratory.com

REPORT OF CALIBRATION

FOR

NOMENCLATURE	:	pH METER
MANUFACTURER	:	HORIBA
MODEL / TYPE	:	LAQUA-PH1100/9615S
SERIAL NO.	:	B80A0042/9X0B0575
DATE OF CALIBRATION	:	12 September 2023

ENVIRONMENT CONDITIONS :

Temperature : (25 ± 2.5) °C **Relative Humidity :** (50 ± 15) % RH

PROCEDURE USED :

This instrument was calibrated under procedure No. **CLC-CPCH-01.** The calibration was performed by direct measurement with Certified Reference Material (CRM).

REFERENCE STANDARD USED :

1. pH Standard Solution, NIMT TRM CODE TRM-S-2003, TRM CODE TRM-S-2007.
2. pH Standard Solution, Control Company Catalog Number 06664263,11784256, Lot Number CC752722.

TRACEABILITY :

1. The measurements are traceable to International System of Units (SI) , through National Institute of Metrology (Thailand). Lot Number. 040822 , 230822. Due Date 26 April 2024.
2. The measurements are traceable to International System of Units (SI) , through Control Company. Certificate No. 4288-13355261 , Due Date 06 May 2024.

UNCERTAINTY :

The reported expanded uncertainty of measurement is stated as the standard uncertainty of measurement multiplied by the coverage factor complies with the table which for a normal distribution corresponds to a coverage probability of approximately 95 %. It has been evaluated according to the "Evaluation of the Uncertainty of Measurement in Calibration (EA-4/02 M:2022)"

CALIBRATION LABORATORY CO., LTD.
2/10-11,14,55 Soi Prasert Manukit 29 Yaek 4, Prasert Manukit Rd., Ladphrao, Bangkok 10230
Tel. 02-578-0353-4 Fax: 02-578-2672 www.cal-laboratory.com E-mail:sale@cal-laboratory.com

CERTIFICATE OF CALIBRATION

FOR

NOMENCLATURE	:	pH METER
MANUFACTURER	:	HORIBA
MODEL / TYPE	:	LAQUA-PH1100/9615S
SERIAL NO.	:	B80A0042/9X0B0575
CLID. NO.	:	272001452
JOB CONTROL NO.	:	230911100397

CUSTOMER : TNP ENVIRONMENT CO., LTD.
332/173 MOO 3 TAMBON BANG RAK PHATTANA,
AMPHOE BANG BUA THONG, NONTHABURI 11110

DATE OF RECEIVED : 11 September 2023 **DATE OF ISSUED :** 14 September 2023

Report of calibration screening must not be taken in part. Except complete. Without the approval of the Calibration Laboratory Co., Ltd.

Calibrated By : [redacted]

Approved By : [redacted]

14 September 2023

This Calibration Certificate documents the traceability to national standards, which realize the units of measurement according to the International System of Units (SI)

CALIBRATION LABORATORY CO., LTD.
2/10-11,14,55 Soi Prasert Manukit 29 Yaek 4, Prasert Manukit Rd., Ladphrao, Bangkok 10230
Tel. 02-578-0353-4 Fax: 02-578-2672 www.cal-laboratory.com E-mail:sale@cal-laboratory.com

CERTIFICATE OF CALIBRATION

FOR

NOMENCLATURE	:	DIGITAL THERMO-HYGROMETER
MANUFACTURER	:	EXTECH INSTRUMENTS
MODEL / TYPE	:	445814
SERIAL NO.	:	PONPE5816745
CLID. NO.	:	232303263
JOB CONTROL NO.	:	230911100396

CUSTOMER : TNP ENVIRONMENT CO., LTD.
332/173 MOO 3 TAMBON BANG RAK PHATTANA,
AMPHOE BANG BUA THONG, NONTHABURI 11110

DATE OF RECEIVED : 11 September 2023 DATE OF ISSUED : 15 September 2023

Report of calibration screening must not be taken in part. Except complete. Without the approval of the Calibration Laboratory Co., Ltd.

Calibrated By : [redacted]

Approved By :

15 September 2023

This Calibration Certificate documents the traceability to national standards, which realize the units of measurement according to the International System of Units (SI)

CALIBRATION LABORATORY CO., LTD.
2/10-11,14,55 Soi Prasert Manukit 29 Yaek 4, Prasert Manukit Rd., Ladphrao, Bangkok 10230
Tel. 02-578-0353-4 Fax: 02-578-2672 www.cal-laboratory.com E-mail:sale@cal-laboratory.com

CONDITION OF CALIBRATION ITEM : GOOD

MEASUREMENT RESULTS : (X) without adjustment ( ) adjustment

The table in the following gives the calibration results and associated measurement uncertainties of pH meter.

CALIBRATION DATA

pH METER RESULT @ 25 °C

Standard pH Buffer Solution (pH)	pH Meter Reading (pH)	pH Meter Reading (mV)	Correction (pH)	Uncertainty of pH Measurement (± pH)	*k* Factor
4.003	4.01	150.2	-0.007	0.010	2,00
7.000	7.00	-26.1	0.000	0.015	2,06
10.003	10.01	-187.1	-0.007	0.016	2,05

Technical Note. Setting function CAL 3 point (4,7,10).

The Scope of Accredited ANAB Certificate No. ACDM-2814 Version 008 Page 2,3 of 54

This report is valid for the above stated instrument/s only.

End of Certificate

น.6/3

CONDITION OF CALIBRATION ITEM : GOOD

MEASUREMENT RESULTS : (X) without adjustment ( ) adjustment

The table in the following gives the calibration results and associated measurement uncertainties of the measuring digital thermo-hygrometer.

CALIBRATION DATA

1. CORRECTION OF TEMPERATURE

Test point (°C)	Actual Temperature (°C)	DUC Reading (°C)	Correction (°C)	Uncertainty ±(°C)
20.0	20.01	19.9	+0.11	0.27
25.0	25.01	25.2	-0.19	

2. CORRECTION OF HUMIDITY

STD Temperature (°C)	STD Reading (%RH)	DUC Reading (%RH)	Correction (%RH)	Uncertainty ± (%RH)
25	50.0	47	+3.0	0.8

Note. The Scope of Accredited ANAB Certificate No. ACDM-2814 Version 008 Page 49 of 54

This report is valid for the above stated instrument/s only.

End of Certificate

CALIBRATION LABORATORY CO., LTD.
2/10-11,14,55 Soi Prasert Manukit 29 Yaek 4, Prasert Manukit Rd., Ladphrao, Bangkok 10230
Tel. 02-578-0353-4 Fax: 02-578-2672 www.cal-laboratory.com E-mail:sale@cal-laboratory.com
CLC Accredited ISO/IEC 17025
ilac-MRA
ANAB ANSI National Accreditation Board ACCREDITED ISO/IEC 17025 CALIBRATION AND DIMENSIONAL MEASUREMENT ACDM-2814

REPORT OF CALIBRATION

FOR

NOMENCLATURE	:	**DIGITAL THERMO-HYGROMETER**
MANUFACTURER	:	**EXTECH INSTRUMENTS**
MODEL / TYPE	:	**445814**
SERIAL NO.	:	**PONPE5816745**
DATE OF CALIBRATION	:	**13 September 2023**

ENVIRONMENT CONDITIONS :

Temperature : (23 ± 2) °C **Relative Humidity : (55 ± 10) %RH**

PROCEDURE USED :

This instrument was calibrated under procedure No. **CLC-CPTH-11.** The calibration was performed by using Chilled Mirror Hygrometer and Temperature & Humidity Chamber which maintained by the Calibration Laboratory Co., Ltd.

REFERENCE STANDARD USED :

Chilled Mirror Hygrometer, Edgetech Model Dew Master S/N. 36151.

Temperature & Humidity Chamber, PGC Model 9141-5114 S/N.0802282.

TRACEABILITY :

The measurements are traceable to International System of Units (SI) , through Thunder Scientific Corporation.

Certificate No. 21028, Due Date 09 December 2023.

UNCERTAINTY :

The reported expanded uncertainty of measurement is stated as the standard uncertainty of measurement multiplied by the coverage factor $k = 2{,}00$ which for a normal distribution corresponds to a coverage probability of approximately 95 %.

It has been evaluated according to the "Evaluation of the Uncertainty of Measurement in Calibration (EA-4/02 M:2022)"

น.6/4

CAL
Calibratech Co.,Ltd.
7/106-7 Moo 2, Sukhaprachasan 3 Rd., Bangpood, Pakkred, Nonthaburi 11120
Tel.(02) 964-6211 Fax.(02) 964-5155, e-mail : calibratech_cal@yahoo.com, calibratech_cal@hotmail.com

Certificate of Calibration

Certificate No. : **67-400049-1**

Result of Calibration : Without Adjustment

UUC Condition As-Received : Good

Function : Temperature measurement

Ice point check : UUC* reading 0 ° C Standard reading 0.8789 °C

Standard Reading (°C)	UUC Reading (°C)	Correction (°C)	Uncertainty (±°C)
21.2064	20	1.2	0.31
31.3084	30	1.3	0.31

Remark

UUC : Unit Under Calibration

This result of calibration was found accurate as shown on date and place of calibration only.

This reported uncertainty of measurement was based on a standard uncertainty multiplied by a coverage factor k = 2 , providing a level of confidence of approximately 95%

- o0o -

[redacted]

CAL
Calibratech Co.,Ltd.
7/106-7 Moo 2, Sukhaprachasan 3 Rd., Bangpood, Pakkred, Nonthaburi 11120
Tel.(02) 964-6211 Fax.(02) 964-5155, e-mail : calibratech_cal@yahoo.com, calibratech_cal@hotmail.com

NSC-TISI-TIS17025
CALIBRATION 0030

Certificate of Calibration

Certificate No. : **67-400049-1**

Submitted by : TNP Environment Co., Ltd.
332/173 Moo 3 Bang Rak Phatthana, Bang Bua Thong, Nonthaburi 11110

Equipment : Liquid in Glass Thermometer

Manufacturer : SK — Model : N/A

Range : 0 °C to 200 °C — Resolution : 1 °C

Serial No. : N/A — Immersion : Total

ID No. : TNP.LAB.12

Environment :

Ambient Temperature : (23 ± 2) °C

Relative Humidity : (50 ± 15) %

Line Voltage : (220 ± 22) VAC

Date of Received : 26 January 2024

Date of Calibration : 01 February to 02 February 2024

Date of Issue : 02 February 2024

Calibrated by : [redacted]

Calibration Method : This instrument was calibrated by In-house method comparison technique CAL-M4001 based on ASTM E77-07 by compared with PRT in the liquid bath at the constant controlled temperature.

The temperature scale used was based on ITS-90

Reference Standard Instruments : This certification is traceable to the International System of Units

1. Platinum Resistance Thermometer (PRT)

ID No.	Cert. No.	Due Date	Traceability
400001	TT-0016-22	07 Feb 2024	National Institute of Metrology Thailand (NIMT)

2. Standard Digital Thermometer

ID No.	Cert. No.	Due Date	Traceability
400003	23E1866	01 Jun 2025	National Institute of Metrology Thailand (NIMT)
400004	23E1866	01 Jun 2025	National Institute of Metrology Thailand (NIMT)

Approve[redacted]

The Uncertainties are for a confidence probability of approximately 95%

This cerificate may not be reproduced other than in full except with the prior written approval of the Calibratech Co.,Ltd.

ENTECH
Where Solutions Begin

Calibration Certificate

NSC-TISI-TIS 17025 CALIBRATION 0157

Certificate no: H/T 670338

Standard refereces

Standard	Reference No.	Vendor	Due Date
ARALAB 300ECP,Fitoclima	S2023070040-001	MIT	07-Jul-24
Thermo HygroPalm HP 23-A	SG-H-00579/66	Success Gateway	16-Aug-24

Measured room conditions

Temperature : 22.1 **°C** **Humidity :** 55.9 **%RH** **Pressure :** 1019.3 **mbar**

Calibration results (Without Adjustment) **Reference temperature :** - **°C**

Parameter of standard	Standard values	Mean of UUC.	Error	Uncertainty (±)
Temperature (°C)	19.97	20.1	0.13	0.50
Temperature (°C)	25.02	25.2	0.18	0.50
Temperature (°C)	29.99	30.2	0.21	0.50

Remark : -

End of Report

Entech Industrial Solution Co.,Ltd.
17/121 Soi Ngamwongwan 47 Yaek 48, Toongsonghong, Laksi, Bangkok 10210 THAILAND Tel. 0-2779-8888 Calibration@entech.co.th
Tax ID : 0105536035591 www.entech.co.th

น.6/6

ENTECH
Where Solutions Begin

Calibration Certificate

NSC-TISI-TIS 17025 CALIBRATION 0157

Certificate no: H/T 670338
Date of issue : 21-Mar-24

Instrument description	:	Thermo-Hygrometer
Instrument model	:	Extech 445815
Instrument serial no.	:	PONPE5899554
ID no. or control no.	:	TNP.LAB.21
Manufacturer	:	Extech Instruments
Probe description	:	-
Probe model	:	-
Probe serial	:	-
Customer name	:	TNP ENVIRONMENT CO.,LTD.
Customer address	:	332/173 Moo 3 Tambon Bang Rak Phatthana, Amphoe Bang Bua Thong, Nonthaburi 11110
Total pages of certificate	:	2 Pages
Receiving no.	:	L-241004-1
Receiving date.	:	08-Mar-24
Parameter of calibration	:	Temperature Calibration
Condition of UUC.	:	Used
Ambient condition	:	All of the Measurement were carried out the stabilized laboratory Temperature : 23 ±5 °C Humidity : 55 ± 15 %RH
Calibration place	:	17/121 Soi Ngamwongwan 47 Yaek 48, Toongsonghong, Laksi, Bangkok 10210
Calibration procedure no.	:	This instrument was calibrated by comparison of indication with the Standard Thermo- hygrometer according to calibration Work Instruction no .WI-CL-11-C

The calibration certificate expanded uncertainty of measurement is stated as the standard uncertainty of measurent Multiplied by coverage factor k=2, which for a normal distribution corresponds to a coverage probability of approximately 95%.

This certificate is applied only to item under test Environmental condition.

This Calibration Certificate may not be reporduced other than in full except with the permission of the issuing laboratory. Calibration certificates without signature and seal not valid.

This calibration certificate documents are tracebility to national standards, which realize measurement according to the International System of Units (SI).

Date of calibration : 20-Mar-24 [redacted]

Entech Industrial Solution Co.,Ltd.
17/121 Soi Ngamwongwan 47 Yaek 48, Toongsonghong, Laksi, Bangkok 10210 THAILAND Tel. 0-2779-8888 Calibration@entech.co.th
Tax ID : 0105536035591 www.entech.co.th

ENTECH Where Solutions Begin

Calibration Certificate

NSC-TISI-TIS 17025 CALIBRATION 0157

Certificate no: H 670285

Standard refereces

Standard	Reference No.	Vendor	Due Date
Thermo HygroPalm HP 23-A	SG-H-00579/66	Success Gateway	16-Aug-24
Hygrogen 2-XL	Performance	Entech	24-Mar-24

Measured room conditions

Temperature : 22.7 **°C** **Humidity :** 56.7 **%RH** **Pressure :** 1013.3 **mbar.**

Calibration results (Without Adjustment) **Reference temperature :** 25.0 **°C**

Parameter of standard	Standard values	Mean of UUC.	Error	Uncertainty (±)
Humidity (%RH)	35.09	31	-4.09	1.3
Humidity (%RH)	50.03	48	-2.03	1.5
Humidity (%RH)	64.97	68	3.03	1.5

Remark : -

End of Report

Entech Industrial Solution Co.,Ltd.
17/121 Soi Ngamwongwan 47 Yaek 48, Toongsonghong, Laksi, Bangkok 10210 THAILAND Tel. 0-2779-8888 Calibration@entech.co.th
Tax ID : 0105536035591 www.entech.co.th

ENTECH Where Solutions Begin

Calibration Certificate

NSC-TISI-TIS 17025 CALIBRATION 0157

Certificate no: H 670285
Date of issue : 21-Mar-24

Instrument description	:	Thermo-Hygrometer
Instrument model	:	Extech 445815
Instrument serial no.	:	PONPE5899554
ID no. or control no.	:	TNP.LAB.21
Manufacturer	:	Extech Instruments
Probe description	:	-
Probe model	:	-
Probe serial	:	-
Customer name	:	TNP ENVIRONMENT CO.,LTD.
Customer address	:	332/173 Moo 3 Tambon Bang Rak Phatthana, Amphoe Bang Bua Thong, Nonthaburi 11110
Total pages of certificate	:	2 Pages
Receiving no.	:	L-241004
Receiving date.	:	08-Mar-24
Parameter of calibration	:	Humidity Calibration
Condition of UUC.	:	Used
Ambient condition	:	All of the Measurement were carried out the stabilized laboratory Temperature : 23 ±5 °C Humidity : 55 ± 15 %RH
Calibration place	:	17/121 Soi Ngamwongwan 47 Yaek 48, Toongsonghong, Laksi, Bangkok 10210
Calibration procedure no.	:	This instrument was calibrated by comparison of indication with the Standard Thermo- hygrometer according to calibration Work Instruction no .WI-CL-11-C

The calibration certificate expanded uncertainty of measurement is stated as the standard uncertainty of measurent Multiplied by coverage factor k=2, which for a normal distribution corresponds to a coverage probability of approximately 95%.

This certificate is applied only to item under test Environmental condition.

This Calibration Certificate may not be reporduced other than in full except with the permission of the issuing laboratory. Calibration certificates without signature and seal not valid.

This calibration certificate documents are tracebility to national standards, which realize measurement according to the International System of Units (SI).

Date of calibration : 19-Mar-24

[redacted]

Entech Industrial Solution Co.,Ltd.
17/121 Soi Ngamwongwan 47 Yaek 48, Toongsonghong, Laksi, Bangkok 10210 THAILAND Tel. 0-2779-8888 Calibration@entech.co.th
Tax ID : 0105536035591 www.entech.co.th

Result of calibration

Nominal Value	Conventional mass		Uncertainty of Measurement (±)	Maximum Permissible error (±)
	Before Adjustment	After Adjustment		
200 g	199.99986 g	-	0.30 mg	1.0 mg
100 g	100.00015 g	-	0.16 mg	0.50 mg
50 g	50.00015 g	-	0.10 mg	0.30 mg
20 g	20.000116 g	-	0.080 mg	0.25 mg
10 g	10.000041 g	-	0.060 mg	0.20 mg
5 g	5.000010 g	-	0.050 mg	0.16 mg
2 g	1.999936 g	-	0.040 mg	0.12 mg
1 g	0.999973 g	-	0.030 mg	0.10 mg
200 mg	200.059 mg	200.007 mg	0.020 mg	0.060 mg
100 mg	100.037 mg	99.981 mg	0.016 mg	0.050 mg

The reported uncertainty of measurement was based on a standard uncertainty multiplied by a coverage factor $k = 2$, providing a level of confidence of approximately 95 %.

-o0o-

[redacted]

TECHNOLOGY PROMOTION ASSOCIATION (THAILAND-JAPAN)
CORPORATE SERVICES 3: EQUIPMENT CALIBRATION AND TESTING SERVICES
534/4 PATTANAKARN ROAD SOI 18, SUANLUANG, SUANLUANG, BANGKOK 10250
TEL. 0-2717-3000-24 FAX. 0-2719-9484

NSC-TISI-TIS17025
CALIBRATION 0008

Certificate of Calibration

Equipment : Standard Weight Set
Manufacturer: -
Model : Class:F1
Serial No.: 15022021-01
ID No.: TNP.LAB.25
Condition As-Received: Used Item
Received Date: 02 March 2023
Calibration Date: 04 March 2023

This certificate may not be reproduced other than in full, except with the prior written approval of the head of Corporate Services 3: Equipment Calibration and Testing Services.

Reference: 2303-0104WN
Ambient Temperature: (23 ± 2) °C
Relative Humidity: (50 ± 15) %
Atmospheric Pressure: 1015.25 mbar

Submitted by: TNP ENVIRONMENT CO.,LTD.
332/173 Moo 3, Bang Rak Phatthana, Bang Bua Thong, Nonthaburi 11110

Procedure used: Calibration were conducted using in-house calibration procedure CP-M01 according to comparison method against standard weights on the basis of weighings at an average air density of 1.2 kg/m³ and a temperature of 23.4 °C material density of weight is 8000 kg/m³.

Condition of this result of calibration

1.Reference standards instuments :

Instrument	Model	Serial No.	Certificate No.	Due Date
1) Standard Weight Set (E2)	73336	20026	MM-0018-22	28 Feb 2024
2) Standard Weight Set (E2)	73338	20028	MM-0019-22	28 Feb 2024

2.This certificate is not certified for any commercial transaction.

3.The certificate is valid only to the item calibrated on date and place of calibration.

4.This Certification is traceable to the International System of Unit maintained at:-

-National Institute of Metrology Thailand (NIMT)

[redacted]

น.6/8

THAI CALIBRATION SERVICES CO., LTD.
19/8 Moo 9 Soi Raiking 30 Puttamonton 5 Rd., Sampran, Nakornpatom 73210
Tel. 0-3439-7682-5 Fax: 0-3439-7687
www.thaical.com E-mail : sale@thaicalibration.com, lab@thaicalibration.com

NSC-TISI-TIS 17025
CALIBRATION 0189

CALIBRATION CERTIFICATE

Certificate No.S2306518S

The repeatability of indication

Nominal Value (g)	Standard Deviation of reading (g)	Maximum difference between suscessive reading (g)	n
100	0.000005	0.00001	5
200	0.00005	0.0001	5

The effect of eccentric application of a load on the indication (test load : 100 g)

Position	Balance Reading (g)
Point 1	100.0000
Point 2	100.0002
Point 3	100.0001
Point 4	100.0000
Point 5	100.0001
Eccentric Value	0.0002

The error of indication

Nominal Value (g)	Value of Reference Standard Weight (g)	Balance Reading (g)	Correction (g)	Uncertainty (±) (g)	k
Unload	0.00000	0.00000	0.00000	0.000016	2.32
0.1	0.10000	0.10003	-0.00003	0.000019	2.10
0.5	0.50000	0.50001	-0.00001	0.000023	2.04
1	1.00001	1.00000	+0.00001	0.000026	2.00
5	5.00000	5.00001	-0.00001	0.000038	2.00
10	9.99999	10.00001	-0.00002	0.000046	2.00
20	20.0000	20.0000	0.0000	0.000085	2.00
50	50.0000	50.0001	-0.0001	0.00011	2.00
100	100.0000	100.0000	0.0000	0.00018	2.00
200	200.0000	200.0004	-0.0004	0.00034	2.00

Remark : Adjustment, External weight nominal value 100 g, Standard weight of Lab

Uncertainty of measurement

The reported expanded uncertainty of measurement is stated as the standard uncertainty of measurement multiplied by the coverage factor (*k*), which for a normal distribution corresponds to a coverage probability of approximately 95% (confidence level).

This report will certify of the calibrated equipment only.

--End--

THAI CALIBRATION SERVICES CO., LTD.
19/8 Moo 9 Soi Raiking 30 Puttamonton 5 Rd., Sampran, Nakornpatom 73210
Tel. 0-3439-7682-5 Fax: 0-3439-7687
www.thaical.com E-mail : sale@thaicalibration.com, lab@thaicalibration.com

NSC-TISI-TIS 17025
CALIBRATION 0189

CALIBRATION CERTIFICATE

Certificate No.S2306518S

Customer : TNP ENVIRONMENT CO., LTD.
332/173 Moo 3 Tambon Bang Rak Phatthana,
Amphoe Bang Bua Thong, Nonthaburi 11110

Equipment : Non-automatic weighing instrument (Electronic instrument)

Manufacturer :	Shimadzu	**Order No. :**	66S2523-1
Model :	AP225WD	**Ambient temperature :**	(26.9 ± 5.0) °C
Accuracy class :	-	**Relative humidity :**	(52.0 ± 10.0) %
Capacity :	10 g / 220 g	**Received date :**	21-Jun-2023
Resolution :	0.00001 g / 0.0001 g	**Date of calibration :**	21-Jun-2023
Serial No. :	D316301848	**Date of issue :**	24-Jun-2023
ID No. :	TNP.LAB.30	**Condition of the balance :**	Good working conditions

Place of calibration : ห้อง LAB

Calibration method

This instrument was calibrated according to the EURAMET Calibration Guide No. 18.

Condition of reference standard weight

Instrument	Nominal value	Serial No.	Certificate No.	Due-date	Density (kg/m³)
1 Standard weight set	1 mg to 2 kg	15885+15849	M2210001S	8-Oct-2023	7950

Traceability of the reference standard weight

This certificate is traceable to SI unit through Mass Calibration Laboratory Thai Calibration Services Co., Ltd., NSC-ONSC accredited no. Calibration 0189.

Calibrated By : [redacted]

This calibration certificate may not be reproduced other than in full, except with the prior written approval of the head of TCS calibration laboratory.

น.6/9

THAI CALIBRATION SERVICES CO., LTD.
19/8 Moo 9 Soi Raiking 30 Puttamonton 5 Rd., Sampran, Nakornpatom 73210
Tel. 0-3439-7682-5 Fax: 0-3439-7687
www.thaical.com E-mail : sale@thaicalibration.com, lab@thaicalibration.com

NSC-TISI-TIS 17025 CALIBRATION 0189

CALIBRATION CERTIFICATE

Certificate No.S2306519S

The repeatability of indication

Nominal Value (g)	Standard Deviation of reading (g)	Maximum difference between successive reading (g)	n
200	0.00000	0.0000	5

The effect of eccentric application of a load on the indication (test load : 100 g)

Position	Balance Reading (g)
Point 1	100.0000
Point 2	100.0000
Point 3	100.0000
Point 4	99.9998
Point 5	99.9998
Eccentric Value	0.0002

The error of indication

Nominal Value (g)	Value of Reference Standard Weight (g)	Balance Reading (g)	Correction (g)	Uncertainty (±) (g)	k
Unload	0.0000	0.0000	0.0000	0.000082	2.00
0.1	0.1000	0.1000	0.0000	0.000083	2.00
0.5	0.5000	0.5000	0.0000	0.000084	2.00
1	1.0000	0.9999	+0.0001	0.000085	2.00
5	5.0000	5.0000	0.0000	0.000090	2.00
10	10.0000	10.0000	0.0000	0.000094	2.00
20	20.0000	20.0001	-0.0001	0.00011	2.00
50	50.0000	50.0001	-0.0001	0.00013	2.00
100	100.0000	100.0000	0.0000	0.00019	2.00
200	200.0000	199.9998	+0.0002	0.00033	2.00

Remark : Without adjustment

Uncertainty of measurement

The reported expanded uncertainty of measurement is stated as the standard uncertainty of measurement multiplied by the coverage factor (*k*), which for a normal distribution corresponds to a coverage probability of approximately 95% (confidence level).

This report will certify of the calibrated equipment only.

--End--

THAI CALIBRATION SERVICES CO., LTD.
19/8 Moo 9 Soi Raiking 30 Puttamonton 5 Rd., Sampran, Nakornpatom 73210
Tel. 0-3439-7682-5 Fax: 0-3439-7687
www.thaical.com E-mail : sale@thaicalibration.com, lab@thaicalibration.com

NSC-TISI-TIS 17025 CALIBRATION 0189

CALIBRATION CERTIFICATE

Certificate No.S2306519S

Customer : TNP ENVIRONMENT CO., LTD.
332/173 Moo 3 Tambon Bang Rak Phatthana,
Amphoe Bang Bua Thong, Nonthaburi 11110

Equipment : Non-automatic weighing instrument (Electronic instrument)

Manufacturer :	Sartorius	**Order No. :**	66S2523-2
Model :	SECURA224-1S	**Ambient temperature :**	(26.8 ± 5.0) °C
Accuracy class :	-	**Relative humidity :**	(52.0 ± 10.0) %
Capacity :	220 g	**Received date :**	21-Jun-2023
Resolution :	0.0001 g	**Date of calibration :**	21-Jun-2023
Serial No. :	0041305301	**Date of issue :**	24-Jun-2023
ID No. :	TNP.LAB.31	**Condition of the balance :**	Good working conditions
Place of calibration :	ห้อง LAB		

Calibration method

This instrument was calibrated according to the EURAMET Calibration Guide No. 18.

Condition of reference standard weight

Instrument	Nominal value	Serial No.	Certificate No.	Due-date	Density (kg/m³)
1 Standard weight set	1 mg to 2 kg	15885+15849	M2210001S	8-Oct-2023	7950

Traceability of the reference standard weight

This certificate is traceable to SI unit through Mass Calibration Laboratory Thai Calibration Services Co., Ltd., NSC-ONSC accredited no. Calibration 0189.

Calibrated By : [redacted]

This calibration certificate may not be reproduced other than in full, except with the prior written approval of the head of TCS calibration laboratory.

น.6/10

CAL
Calibratech Co.,Ltd.
7/106-7 Moo 2, Sukhaprachasan 3 Rd., Bangpood, Pakkred, Nonthaburi 11120
Tel.(02) 964-6211 Fax.(02) 964-5155, e-mail : calibratech.cal@yahoo.com, calibratech.cal@hotmail.com

ilac-MRA
NSC-TISI-TIS17025
CALIBRATION 0030

Certificate of Calibration

Certificate No. : **66-400687-1** **Page : 1 of 2**

Submitted by : TNP Environment Co., Ltd.
332/173 Moo 3 Bang Rak Phatthana, Bang Bua Thong, Nonthaburi 11110

Equipment : Air Chamber (Oven)
Manufacturer : Memmert Model : UF75
Range : N/A °C Resolution : 0.1 °C
Serial No. : B320.0251 ID No. : N/A

Environment : On site calibration was carried out at the Laboratory, TNP Environment Co., Ltd.
Ambient Temperature : (27.0 to 28.0) °C
Relative Humidity : (45 to 50) %
Line Voltage : (228.0 to 230.0) V

Date of Received : 11 December 2023
Date of Calibration : 11 December 2023
Date of Issue : 14 December 2023
Calibrated by : [redacted]
Calibration Method : CAL-M4004, TLAS G-20
The temperature scale used was based on ITS-90

Reference Standard Instruments : This certification is traceable to the International System of Units
Standard Digital Thermometer with Thermocouple probe

ID No.	Cert. No.	Due Date	Traceability
400046 & 400023	66-400547-1	04 Apr 2024	National Institute of Metrology Thailand (NIMT)

Approve[redacted]

The Uncertainties are for a confidence probability of approximately 95%

This cerificate may not be reproduced other than in full except with the prior written approval of the Calibratech Co.,Ltd.

HARIKUL SCIENCE
Harikul Science Co.,Ltd.
694 Soi Ratchadanivet 24, Pracharatbamphen,
Samsaennok, Huaikhwang, Bangkok 10310
Tel: 0-2274-2456 Fax: 0-2274-2443
Email: info@harikul.com www.harikul.com

CERT.No.: HS-U039F

Certificate of Calibration

Calibration Date : 20 Jun 23
Submitted by : TNP ENVIRONMENT COMPANY LIMITED.
332/173 Moo. 3, Tambon Bang Rak Phatthana,
Amphoe Bang Bua Thong, Nonthaburi 11110

Avg Room Temp : 20 °C
Avg Water Temp : 20 °C
Air Pressure : 757.00 mmHg
Salinity : 0 ppt

Model : YSI 4010-2W
S/N : 22051520
Probe : YSI 4100
S/N : 22C102711
ID NO. : -
Air Temp ref : S/N. E00522
Barometric ref : S/N. E00522
Water Temp ref : S/N. 11431

Technician : Kittipong M.

Calibration Details

Calibration Point	100% air sat. (@20 °C, DO = 9.09 mg/l)	(status)		(status)
Measurement 1 (mg/l)	9.05	(PASS)	-	-
Measurement 2 (mg/l)	9.05	(PASS)	-	-
Measurement 3 (mg/l)	9.04	(PASS)	-	-
Measurement 4 (mg/l)	9.03	(PASS)	-	-
Measurement 5 (mg/l)	9.04	(PASS)	-	-
Measurement 6 (mg/l)	9.04	(PASS)	-	-
Measurement 7 (mg/l)	9.04	(PASS)	-	-
Measurement 8 (mg/l)	9.03	(PASS)	-	-
Measurement 9 (mg/l)	9.03	(PASS)		-
Measurement 10 (mg/l)	9.03	(PASS)	-	-
Mean Measurement	9.04	mg/l	-	-
Inaccuracy	0.05	mg/l	-	-
Overall Status	(PASS)			

Manufacturer Specification
Accuracy = +/- 0.2 mg/l

1) This certificate is issued based on the result that are found as shown on date and place of test only.
2) The calibration procedure followed in accordance with Harikul Science Co., Ltd.
3) This result shall not be used for advertising purpose.

[redacted]

METROLOGY SYSTEM (THAILAND) CO.,LTD.

ID LINE : IEC17025

ilac-MRA ANAB ACCREDITED CALIBRATION AND DIMENSIONAL MEASUREMENT

Certificate of Calibration

Certificate Number : SPR23110535-2

Customer : TNP ENVIRONMENT CO.,LTD.
332/173 Moo.3, Bang Rak Phatthana, Bang Bua Thong, Nonthaburi 11110

Equipment Name : Water Quality Meter

Manufacturer : Digicon

Model : WA-48SD

Serial Number : T.075714

ID. Number : TNP-LAB-46

Environmental Conditions

Ambient Temperature	: 23 °C ± 2 °C	Received Date	: 30 Nov 2023
Relative Humidity	: 50 % ± 15 %	Calibration Date	: 19 Jan 2024
Location of Calibration	: In-Lab	Recommend Due Date	: 19 Jan 2025
Calibration Procedure	: SP-CPC-04-01, SP-CPC-04-02,	Date of Issue	: 20 Jan 2024

Method of Calibration

This certifies that the above instrument was calibrated in compliance with the calibration system requirement of ISO/IEC 17025:2017 in accordance with reference procedure. Standards used to perform this calibration are certified by to NIST or equivalent, National metrology institute, Natural physical constants, consensus standards. The result reported herein apply only to the calibration of the item described above as received.Our decision rule is to contact the customer if the item pass and fail calibration when the results include the uncertainties and the customer must determine if the results meets their needs.

The calibration certificate shall not be reproduced except in full,without written approval of SP Metrology System (Thai[redacted]

Calibrated b[redacted]

Authorized Signatory

SP-FM-04-15 rev.0

69/29 Moo 1 Klongsi Klongluang Pathumthani 12120 (Thailand) Tel: (662) 193-2220 5 คู่สาย www.สอบเทียบเครื่องมือวัด.com

CAL

Calibratech Co.,Ltd.
7/106-7 Moo 2, Sukhaprachasan 3 Rd., Bangpood, Pakkred, Nonthaburi 11120
Tel.(02) 964-6211 Fax.(02) 964-5155, e-mail : calibratech_cal@yahoo.com, calibratech_cal@hotmail.com

Certificate of Calibration

Certificate No. : 66-400687-1

Result of Calibration : Without Adjustment

UUC Condition As-Received : Good

Function : Temperature measurement

This instrument was setting air ventilation at position 0 (close)

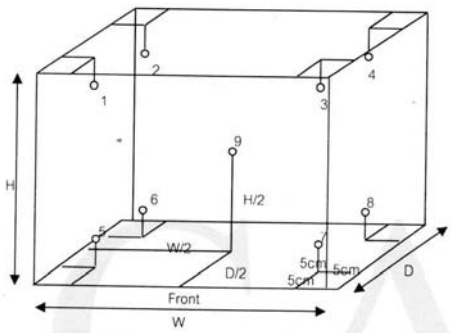

Inside of Chamber
W = 0.40 m
D = 0.33 m
H = 0.56 m
Capacity = 0.07 m^3

Test Point (°C)	Setting Temperature (°C)	Indicating Temperature (°C)	Measured Temperature (°C) @ Sensor No. 1	2	3	4	5	6	7	8	9	Uncertainty (±°C)
85.0	85.0	85.0	85.3	85.1	85.2	85.1	85.0	84.8	84.7	84.7	85.0	0.64
104.0	104.0	104.0	104.3	104.2	104.3	104.1	104.0	103.8	103.7	103.7	104.0	0.69
180.0	180.0	180.0	179.5	179.9	180.0	179.8	179.9	179.4	178.9	179.4	180.0	0.95

Test Point (°C)	Setting Temperature (°C)	Indicating Temperature (°C)	Measured Uniformity (°C)	Measured Stability (°C)	Overall Variation (°C)
85.0	85.0	85.0	0.4	0.1	0.8
104.0	104.0	104.0	0.4	0.1	0.8
180.0	180.0	180.0	1.4	0.3	1.6

Remark The uncertainty is not combine uniformity of the air chamber

This result of calibration was found accurate as shown on date and place of calibration only.

This reported uncertainty of measurement was based on a standard uncertainty multiplied by a coverage factor k = 2 , providing a level of confidence of approximately 95%

- o0o -

[redacted]

CAL-F0031-03

ID LINE : IEC17025

Result of Calibration

Certificate No. : SPR23110535-2

pH Measurement @ 25 °C

Unit : pH

Standard Solution	UUC Reading	Error	Uncertainty (±)
4.008	3.98	-0.028	0.014
6.984	7.01	0.026	0.012
10.011	10.02	0.009	0.018

Conductivity Measurement @ 25 °C

Standard Solution	UUC Reading	Error	Uncertainty (±)
84 µS/cm	84.6 µS/cm	0.6 µS/cm	0.60 µS/cm
1.413 mS/cm	1.415 mS/cm	0.002 mS/cm	0.0082 mS/cm
12.88 mS/cm	12.89 mS/cm	0.01 mS/cm	0.075 mS/cm

* Dissolved Oxygen Permanance Test

Unit : mg/L

Actual Standard	UUC Reading	Error	Uncertainty (±)
0.0	0.0	0.0	0.13
5.0	4.9	-0.1	0.13
8.3	8.2	-0.1	0.13

Salinity Measurement

Unit : % Salinity

Actual Standard	UUC Reading	Error	Uncertainty (±)
5.0269	5.04	0.0131	0.015

Note:

The result of calibration was found accurate as show on date and place of calibration only.
This Certificate is not certified for any commercial transaction.
Calibration Marked (*) "Not ANAB Accredited " in this Certificate have been included for completeness.

Measurement Uncertainty

The reported uncertainty of measurement is the expanded uncertainty obtained by multiplying the standard uncertainty with the coverage factor k = 2, providing a level of confidence approximately 95%.

- End of Certificate -

69/29 Moo 1 Klongsi Klongluang Pathumthani 12120 (Thailand) Tel: (662) 193-2220 5 ศูนย์ www.สอบเทียบเครื่องมือวัด.com

METROLOGY SYSTEM (THAILAND) CO.,LTD.

ID LINE : IEC17025

Calibration Report

Certificate Number : SPR23110535-2

Reference Standards

Equipment Name	Model	Serial No.	Certificate No.	Due. Date
Zero Oxygen Solution	HI7040L	Lot S0027-23 _	21C31	21 Mar 2028
Standard pH Solution	PH016.L5	Lot No.882984	61267077	20 Mar 2024
Standard pH Solution	PH107.L5	Lot No.882985	61275614	13 Apr 2024
Standard pH Solution	PH020.L5	Lot No.882986	61268050	20 Mar 2024
Conductivity Standard 84 uS/cm	CS84M0S.L5	Lot No.882987	61247444	20 Mar 2024
Conductivity Standard 1413 uS/cm	CS1413M0S.L5	Lot No.882988	61267992	20 Mar 2024
Conductivity Standard 12880 uS/cm	CS1288P1S.L5	Lot No.882989	61247253	20 Mar 2024
Sodium Chloride Standard Solution	RM003461L25	Lot No.841770	97756699	23 Sep 2024

Traceability

This certification is traceable to the International System of Unit maintained at :
HANNA - Hanna Instruments (Thailand) Ltd.
C.P.A. Chem - ANAB#AT-1836 (ISO/IEC 17025:2017) and ANAB#AR-1835 (ISO/IEC 17034:2016)

69/29 Moo 1 Klongsi Klongluang Pathumthani 12120 (Thailand) Tel: (662) 193-2220 5 ศูนย์ www.สอบเทียบเครื่องมือวัด.com

Condition of calibration result

1. Reference Standard Material :

Material	Serial No.	Certificate No.	Due date
1. Absorbance Standard set	39130	106269	10 Oct 2024
2. Wavelength Standard set	36730	98330	19 Jan 2024
3. Wavelength Standard set	36730	98331	19 Jan 2024

2. This certificate is valid only to the item calibrated on date and place of calibration.
3. This certificate is traceable to the International System of Unit maintained through :
   - Starna Scientific Ltd.

4. Spectral BandWidth : 4 nm
   Scan Speed : - nm/min

Calibration Results : without adjustment

Wavelength Accuracy

Certified Values of Reference Material (nm)	UUC Reading (nm)	Uncertainty of Measurement (± nm)	Coverage Factor *k*
418.48	418.5	0.15	2.00
513.70	513.1	0.14	2.00
536.90	536.3	0.14	2.00
637.94	637.6	0.14	2.00
879.70	878.8	0.15	2.00

[redacted]

TECHNOLOGY PROMOTION ASSOCIATION (THAILAND-JAPAN)
CORPORATE SERVICES 3: EQUIPMENT CALIBRATION AND TESTING SERVICES
534/4 PATTANAKARN ROAD SOI 18, SUANLUANG, SUANLUANG BANGKOK 10250
TEL. 0-2717-3000-29 FAX. 0-2719-9484

NSC-TISI-TIS17025 CALIBRATION 0008

Certificate of Calibration

Equipment :	Spectrophotometer
Manufacturer :	Merck
Model :	Prove 100
Serial No. :	1904113676
ID No. :	S2019025
Condition As-Received:	Used Item
Received Date :	21 September 2023
Calibration Date :	21 September 2023
Reference :	2309-0483OC-2
Submitted by :	SGS (Thailand) Limited 1/209, 1/211 Moo 1, Ban Chang, Ban Chang, Rayong 21130
Calibration Place :	Spectrophotometry Lab
Ambient Temperature :	(23.8 - 20.9) °C (On-Site)
Relative Humidity :	(50.1 - 50.2) % (On-Site)
Calibration Procedure :	In - house method : CP-OCH4 based on ASTM E 275-01

Calibrated by : [redacted]

Approved by :

(✓) Saithip M[redacted]
( ) Warakorn [redacted]
( ) Ponpan P[redacted]

Issue Date : 26 September 2023

The Uncertainties are for a confidence probability of approximately 95%

This certificate may not be reproduced other than in full, except with the prior written
Approval of the head of Corporate Services 3 : Equipment Calibration and Testing Services.

Verification COD Reactor

Equipment Name	Dri-Block Heater-Digital	Temperature Ver	150±2 °C
Serial No.	000827-A	Model	DB 200/3
Reference Standard	Thermocouple Type K	Certificate No.	21/4272
Calibration Date	10/03/2023	Next Cal. Date	10/03/2024

Left

Hole 1				Hole 2				Hole 3			
NO.	Result			NO.	Result			NO.	Result		
	temp. °C	Corr.	temp+Corr.		temp. °C	Corr.	temp+Corr.		temp. °C	Corr.	temp+Corr.
1	151.1	-0.36	150.7	1	150.6	-0.36	150.2	1	151.4	-0.36	151.0
2	150.8	-0.36	150.4	2	151.7	-0.36	151.3	2	151.3	-0.36	150.9
3	151.2	-0.36	150.8	3	151.1	-0.36	150.7	3	151.7	-0.36	151.3
		Mean	150.67			Mean	150.77			Mean	151.11
		SD	0.208			SD	0.551			SD	0.208
		%RSD	0.138			%RSD	0.365			%RSD	0.138

Hole 4				Hole 5				Hole 6			
NO.	Result			NO.	Result			NO.	Result		
	temp. °C	Corr.	temp+Corr.		temp. °C	Corr.	temp+Corr.		temp. °C	Corr.	temp+Corr.
1	151.7	-0.36	151.3	1	150.5	-0.36	150.1	1	151.5	-0.36	151.1
2	151.6	-0.36	151.2	2	151.3	-0.36	150.9	2	151.4	-0.36	151.0
3	151.5	-0.36	151.1	3	150.6	-0.36	150.2	3	150.5	-0.36	150.1
		Mean	151.24			Mean	150.44			Mean	150.77
		SD	0.100			SD	0.436			SD	0.551
		%RSD	0.066			%RSD	0.290			%RSD	0.365

Hole 7				Hole 8				Hole 9			
NO.	Result			NO.	Result			NO.	Result		
	temp. °C	Corr.	temp+Corr.		temp. °C	Corr.	temp+Corr.		temp. °C	Corr.	temp+Corr.
1	151.3	-0.36	150.9	1	151.7	-0.36	151.3	1	150.5	-0.36	150.1
2	151.0	-0.36	150.6	2	150.5	-0.36	150.1	2	151.2	-0.36	150.8
3	151.3	-0.36	150.9	3	151.4	-0.36	151.0	3	150.8	-0.36	150.4
		Mean	150.84			Mean	150.84			Mean	150.47
		SD	0.173			SD	0.624			SD	0.351
		%RSD	0.115			%RSD	0.414			%RSD	0.233

Hole 10				Hole 11				Hole 12			
NO.	Result			NO.	Result			NO.	Result		
	temp. °C	Corr.	temp+Corr.		temp. °C	Corr.	temp+Corr.		temp. °C	Corr.	temp+Corr.
1	151.6	-0.36	151.2	1	151.5	-0.36	151.1	1	150.7	-0.36	150.3
2	151.6	-0.36	151.2	2	151.2	-0.36	150.8	2	151.6	-0.36	151.2
3	150.8	-0.36	150.4	3	151.5	-0.36	151.1	3	151.2	-0.36	150.8
		Mean	150.97			Mean	151.04			Mean	150.81
		SD	0.462			SD	0.173			SD	0.451
		%RSD	0.306			%RSD	0.115			%RSD	0.299

[redacted]

Calibration Results : **without adjustment**

Photometric Accuracy

Wavelength (nm)	Certified Values of Reference Material (Abs)	UUC Reading (Abs)	Uncertainty of Measurement (±Abs)	Coverage Factor *k*
440.0	Zero	0.000	0.0028	2.00
	0.5645	0.563	0.0028	2.00
	0.6988	0.698	0.0028	2.00
	1.0017	1.001	0.0028	2.00
546.1	Zero	0.000	0.0028	2.00
	0.5281	0.527	0.0028	2.00
	0.6962	0.696	0.0028	2.00
	0.9984	0.998	0.0028	2.00
635.0	Zero	0.000	0.0028	2.00
	0.5699	0.569	0.0028	2.00
	0.7606	0.760	0.0028	2.00
	1.0927	1.092	0.0028	2.00

Remark

- Each individual filter is measured against the empty filter holder (blank) used to zero the spectrophotometer

The reported uncertainty of measurement was based on a standard uncertainty multiplied by a coverage factor *k* , providing a level of confidence of approximately 95 %.

-o0o-

[redacted]

Verification COD Reactor

Equipment Name	Dri-Block Heater Digital	Temperature Ver	150±2 °C
Serial No.	000827/A	Model	DB 200/3
Reference Standard	Thermocouple Type K	Certificate No.	21/4272
Calibration Date	10/03/2023	Next Cal. Date	10/03/2024

Right

Hole 1				Hole 2				Hole 3			
NO.	Result			NO.	Result			NO.	Result		
	temp. °C	Corr.	temp+Corr.		temp. °C	Corr.	temp+Corr.		temp. °C	Corr.	temp+Corr.
1	149.9	-0.36	149.5	1	150.3	-0.36	149.9	1	151.0	-0.36	150.6
2	151.1	-0.36	150.7	2	151.0	-0.36	150.6	2	151.0	-0.36	150.6
3	150.9	-0.36	150.5	3	149.9	-0.36	149.5	3	150.4	-0.36	150.0
		Mean	150.27			Mean	150.04			Mean	150.44
		SD	0.643			SD	0.557			SD	0.346
		%RSD	0.428			%RSD	0.371			%RSD	0.230

Hole 4				Hole 5				Hole 6			
NO.	Result			NO.	Result			NO.	Result		
	temp. °C	Corr.	temp+Corr.		temp. °C	Corr.	temp+Corr.		temp. °C	Corr.	temp+Corr.
1	150.8	-0.36	150.4	1	150.0	-0.36	149.6	1	150.5	-0.36	150.1
2	151.0	-0.36	150.6	2	150.0	-0.36	149.6	2	150.8	-0.36	150.4
3	150.9	-0.36	150.5	3	150.7	-0.36	150.3	3	149.8	-0.36	149.4
		Mean	150.54			Mean	149.87			Mean	150.01
		SD	0.100			SD	0.404			SD	0.513
		%RSD	0.066			%RSD	0.270			%RSD	0.342

Hole 7				Hole 8				Hole 9			
NO.	Result			NO.	Result			NO.	Result		
	temp. °C	Corr.	temp+Corr.		temp. °C	Corr.	temp+Corr.		temp. °C	Corr.	temp+Corr.
1	150.8	-0.36	150.4	1	151.1	-0.36	150.7	1	150.2	-0.36	149.8
2	150.9	-0.36	150.5	2	150.7	-0.36	150.3	2	150.2	-0.36	149.8
3	151.0	-0.36	150.6	3	151.1	-0.36	150.7	3	149.9	-0.36	149.5
		Mean	150.54			Mean	150.61			Mean	149.74
		SD	0.100			SD	0.231			SD	0.173
		%RSD	0.066			%RSD	0.153			%RSD	0.116

Hole 10				Hole 11				Hole 12			
NO.	Result			NO.	Result			NO.	Result		
	temp. °C	Corr.	temp+Corr.		temp. °C	Corr.	temp+Corr.		temp. °C	Corr.	temp+Corr.
1	150.6	-0.36	150.2	1	150.5	-0.36	150.1	1	150.9	-0.36	150.5
2	150.5	-0.36	150.1	2	150.9	-0.36	150.5	2	150.0	-0.36	149.6
3	149.9	-0.36	149.5	3	151.1	-0.36	150.7	3	150.5	-0.36	150.1
		Mean	149.97			Mean	150.47			Mean	150.11
		SD	0.379			SD	0.306			SD	0.451
		%RSD	0.252			%RSD	0.203			%RSD	0.300

[redacted]

Verification COD Reactor

Equipment Name	Dri-Block Heater Digital	Temperature Ver	150±2 °C
Serial No.	000827-A	Model	DB 200/3
Reference Standard	Thermocouple Type K	Certificate No.	21/4272
Calibration Date	10/03/2023	Next Cal. Date	10/03/2024

Middle

Hole 1				Hole 2				Hole 3			
NO.	Result			NO.	Result			NO.	Result		
	temp. °C	Corr.	temp+Corr.		temp. °C	Corr.	temp+Corr.		temp. °C	Corr.	temp+Corr.
1	151.2	-0.36	150.8	1	150.7	-0.36	150.3	1	151.1	-0.36	150.7
2	151.5	-0.36	151.1	2	151.7	-0.36	151.3	2	151.6	-0.36	151.2
3	151.6	-0.36	151.2	3	150.8	-0.36	150.4	3	150.9	-0.36	150.5
		Mean	151.07			Mean	150.71			Mean	150.84
		SD	0.208			SD	0.551			SD	0.361
		%RSD	0.138			%RSD	0.365			%RSD	0.239

Hole 4				Hole 5				Hole 6			
NO.	Result			NO.	Result			NO.	Result		
	temp. °C	Corr.	temp+Corr.		temp. °C	Corr.	temp+Corr.		temp. °C	Corr.	temp+Corr.
1	151.5	-0.36	151.1	1	151.6	-0.36	151.2	1	150.5	-0.36	150.1
2	150.7	-0.36	150.3	2	151.2	-0.36	150.8	2	150.6	-0.36	150.2
3	151.6	-0.36	151.2	3	151.2	-0.36	150.8	3	151.2	-0.36	150.8
		Mean	150.91			Mean	150.97			Mean	150.41
		SD	0.493			SD	0.231			SD	0.379
		%RSD	0.327			%RSD	0.153			%RSD	0.252

Hole 7				Hole 8				Hole 9			
NO.	Result			NO.	Result			NO.	Result		
	temp. °C	Corr.	temp+Corr.		temp. °C	Corr.	temp+Corr.		temp. °C	Corr.	temp+Corr.
1	151.5	-0.36	151.1	1	151.5	-0.36	151.1	1	151.2	-0.36	150.8
2	150.5	-0.36	150.1	2	151.7	-0.36	151.3	2	150.9	-0.36	150.5
3	150.8	-0.36	150.4	3	151.1	-0.36	150.7	3	151.4	-0.36	151.0
		Mean	150.57			Mean	151.07			Mean	150.81
		SD	0.513			SD	0.306			SD	0.252
		%RSD	0.341			%RSD	0.202			%RSD	0.167

Hole 10				Hole 11				Hole 12			
NO.	Result			NO.	Result			NO.	Result		
	temp. °C	Corr.	temp+Corr.		temp. °C	Corr.	temp+Corr.		temp. °C	Corr.	temp+Corr.
1	151	-0.36	150.6	1	151.5	-0.36	151.1	1	151.2	-0.36	150.8
2	150.6	-0.36	150.2	2	150.6	-0.36	150.2	2	150.5	-0.36	150.1
3	151.5	-0.36	151.1	3	151.0	-0.36	150.6	3	151.1	-0.36	150.7
		Mean	150.67			Mean	150.67			Mean	150.57
		SD	0.451			SD	0.451			SD	0.379
		%RSD	0.299			%RSD	0.299			%RSD	0.251

[redacted]

ARCHEMICA

Certificate of Calibration

Aquion RFIC : Anion System (ID#1054)

This certificate is to verify that instrument below are calibrated by

Archemica Lab Co.,Ltd.

Aquion	S/N 220380025
AS-DV	S/N 2203880170

For

SGS (Thailand) Limited (Rayong Branch).

Operator Signat[redacted] : 15 / Nov / 2023

น.6/17

<u>สรุปผลการ Verify</u>

ปรับอุณหภูมิที่ 154.0 °C แต่ละคอลัมน์จะมีอุณหภูมิ 150 ± 2 °C ทุกคอลัมน์

[redacted]

SGS Form No. ENGL 11600, Rev 3.0, Date 15/03/2016

PerkinElmer

MAINTENANCE AND TEST CERTIFICATE MODEL

Avio220 Max

SERIAL NUMBER M79S2304111 **DATE TESTED** January 10, 2024

1. MECHANICAL CHECKS

A. Inspect and clean all fans and filters.	OK
B. Inspect and replace as necessary, all torch components including the RF coil.	OK
C. Inspect all tubing for sign of clacking or leaking.	OK
D. Adjust water and gas pressure regulator settings.	OK
E. Inspect and leak check pneumatics drawers.	OK
F. Clean the exterior of the instrument.	OK

2. OPTICAL CHECKS

A. Inspect and clean all optical components.	OK
B. As reqiured, check and replace all purgebfilters.	OK
C. Recheck optical alignment.	OK

3. COOLING SYSTEM CHECKS

A. Perform preventive maintenance on chiller.	OK
B. Flush out the chiller every year.	OK

4. PERFORMANCE CHECKS

A. Torch View Alignment.	OK
B. Wavelength Calibration.	OK

PerkinElmer Scientific (Thailand) Co., Ltd.
290 Soi Soonvijai 4, Bangkapi, Huay Kwang, Bangkok 10310 Head Office

WO-02557040/2024

PerkinElmer

MAINTENANCE AND TEST CERTIFICATE MODEL

Avio220 Max

Customer :	SGS(Thailand)Limited Rayong Branch	**Date Tested:**	January 10, 2024
Address :	1/209 , 1/211 Moo 1, T. Banchang, A. Banchang Rayong 21130	**Recommendation Recertification Period**	6 Months
		Recertification Due:	July 10, 2024
		Date Last Certified:	N/A
User Name	[redacted]	**Visit Number:**	1OF2 W
Phone:		**PerkinElmer Phone:**	02-719-6420 ext 206
Email:		**PerkinElmer Fax:**	02-318-5597

CONFIGURATION TESTED

MODEL	SERIAL NUMBER	SOFTWARE
AVIO200 MAX	M79S2304111	Syngristix V5

TESTED EQUIPMENT	CALIBRATION NUMBER	EXPIRATION
IPV Methods		

TEST STANDARD USED	PART NUMBER	EXPIRATION DATE
Multielement Standard	N069-1579	30-Dec-24
Instrument Cal. STD4	N930-0221	30-Nov-24

CUSTOMER SUPPLIED	COMMENTS	CUSTOMER INITIALS
2 % HNO3		
10 % HNO3		

PerkinElmer Scientific (Thailand) Co., Ltd.
290 Soi Soonvijai 4, Bangkapi, Huay Kwang, Bangkok 10310 Head Office

น.6/18

PerkinElmer

MAINTENANCE AND TEST CERTIFICATE MODEL

Avio220 Max

SERIAL NUMBER M79S2304111 **DATE TESTED** January 10, 2024

Remarks :

Commissioning follow as commissioning performance sheets.

This is to certify that the above tests have been perfomed and the configuration tested

- [x] meets
- [ ] does not meet

the PerkinElmer Specifications listed on this certificate.

This certificate does not modify PerkinElmer's standard terms and condition of sale, including warranty terms.

Service Department PerkinElmer Ltd.

Customer Service Engineer: [redacted]

PerkinElmer Scientific (Thailand) Co., Ltd.
290 Soi Soonvijai 4, Bangkapi, Huay Kwang, Bangkok 10310 Head Office

WO-02557040/2024

PerkinElmer

MAINTENANCE AND TEST CERTIFICATE MODEL
Avio220 Max

SERIAL NUMBER M79S2304111 **DATE TESTED** January 10, 2024

PARAMETER		SPECIFICATION		FINAL VALUE	
Spectral Resolution : UV					
As	193.696 nm	≤ 0.009	nm	0.00864	nm
Ni	231.604 nm	≤ 0.011	nm	0.01009	nm
Ni	341.476 nm	≤ 0.015	nm	0.01169	nm
Spectral Resolution : VIS					
Ba	455.403 nm	≤ 0.020	nm	0.01776	nm
Precision					
Zn	206.200 nm	% RSD	≤ 1.0 %	0.28	%
Mg	280.271 nm	% RSD	≤ 1.0 %	0.73	%
Mg	285.213 nm	% RSD	≤ 1.0 %	0.61	%
Ba	455.403 nm	% RSD	≤ 1.0 %	0.54	%
Detection Limits : Axial					
Tl	190.801 nm	3(sd)		1.52	ppb
As	193.696 nm	3(sd)		1.4	ppb
Se	196.026 nm	3(sd)		1.53	ppb
Pb	220.353 nm	3(sd)		1.72	ppb
Detection Limits : Radial					
As	193.696 nm	3(sd)		1.69	ppb
Zn	213.857 nm	3(sd)		0.42	ppb
Mn	257.610 nm	3(sd)		0.1	ppb
La	379.478 nm	3(sd)		0.61	ppb
Ba	455.403 nm	3(sd)		0.13	ppb
Ba	493.408 nm	3(sd)		0.1	ppb
BEC : Axial (IB X 1000)/(IS-IB)					
Mn	257.610 nm	≤ 30 ppb		7.83	ppb
BEC : Radial (IB X 1000)/(IS-IB)					
Mn	257.610 nm	≤ 30 ppb		17.57	ppb

PerkinElmer Scientific (Thailand) Co., Ltd.
290 Soi Soonvijai 4, Bangkapi, Huay Kwang, Bangkok 10310 Head Office

Thermology Co., Ltd.
96/177-96/178 Moo 6, T. La-harn, A. Bangbuathong, Nonthaburi 11110
Tel : 0 2191 6479 Fax : 0 2191 6480 website : www.thermology.co
NSC-TISI-TIS17025
CALIBRATION 0109

CALIBRATION CERTIFICATE

Date of Issue	Jun 28, 2024	**Cert No.**	24/2419
Site Calibration		**Order No.**	24060337

Results (without adjustment)

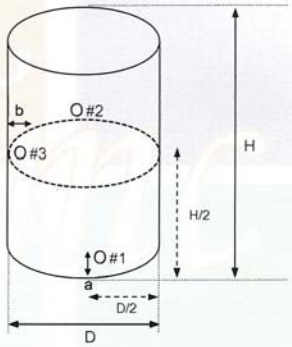

Position of reference thermometers were placed

Note.

1). Duration of the holding time was 45 minutes.

2). Stability - greatest one half of difference between max peak and min peak of each reference probe measured temperature obtained during the calibration interval.

3). Uniformity - the maximum difference of measured temperatures at any sensors and the measured temperature at the reference location which are observed at the same time or at as close an observation time as possible to determine the temperature pattern or homogeneity within the chamber under steady state conditions. The reference sensor should preferably be located at the geometric center of the chamber.

[redacted]

Thermology Co., Ltd.
96/177-96/178 Moo 6, T. La-harn, A. Bangbuathong, Nonthaburi 11110
Tel : 0 2191 6479 Fax : 0 2191 6480 website : www.thermology.co
NSC-TISI-TIS17025
CALIBRATION 0109

CALIBRATION CERTIFICATE

Date of Issue	Jun 28, 2024	**Cert No.**	24/2419
Site Calibration		**Order No.**	24060337

Customer	Bureau Veritas AQ Lab (Thailand) Limited 111 Thailand Science Park Moo 9 Paholyothin Rd., Klong 1, Klong Luang, Pathumthani 12120 Thailand
Place of Calibration	Prepare Culture Media
Description	Autoclave
Model	VE-65
Serial No.	7202
ID.No.	CHM000206
Date of Receipt	Jun 26, 2024
Date of Calibration	Jun 26, 2024

Environment						
Temperature	(Min)	22.1	°C	(Max)	25.5	°C
Relative Humidity	(Min)	42.7	%RH	(Max)	56.3	%RH

Calibration Method

WI-22 : The reference thermometer was placing into the chamber and measurement based on BS-2646. The temperature scale in use at this laboratory is the International Temperature Scale of 1990.

[redacted]

This certificate is issued in accordance with the conditions of Thermology Laboratory.The traceability to recognised nationa
unit of measurement realised at corresponding national standard laboratory.This certificate may not be reproduced other tha
the prior written approval of laboratory.

02/9/ก

Thermology Co., Ltd.
96/177-96/178 Moo 6, T. La-harn, A. Bangbuathong, Nonthaburi 11110
Tel : 0 2191 6479 Fax : 0 2191 6480 website : www.thermology.co

NSC-TISI-TIS17025
CALIBRATION 0109

CALIBRATION CERTIFICATE

Date of Issue Jun 28, 2024 **Cert No.** 24/2419
Site Calibration **Order No.** 24060337

The stability and uniformity was taken into account in the measurement uncertainty stated.
The above results are valid exclusively for calibration samples as mentioned in the report.
The reported expanded uncertainty is based on a standard uncertainty multiplied by a coverage factor k=2, providing a level of confidence of approximately 95%. The uncertainty evaluation has been carried out in accordance with ONAC requirements.

APPROVED SIGNATORY [redacted]

Thermology Co., Ltd.
96/177-96/178 Moo 6, T. La-harn, A. Bangbuathong, Nonthaburi 11110
Tel : 0 2191 6479 Fax : 0 2191 6480 website : www.thermology.co

NSC-TISI-TIS17025
CALIBRATION 0109

CALIBRATION CERTIFICATE

Date of Issue Jun 28, 2024 **Cert No.** 24/2419
Site Calibration **Order No.** 24060337

Results (without adjustment)

UUC Setting (°C)	UUC Reading (°C)	UUC Reading (KPa)	Reference Thermometer (°C)		Stability ±(°C)	Uniformity (°C)	Uncertainty ±(°C)
115.0	115.3	179.6	Position 1	115.58	0.25	0.15	0.70
			Position 2	115.58			
			Position 3	115.48			

UUC Setting (°C)	UUC Reading (°C)	UUC Reading (KPa)	Reference Thermometer (°C)		Stability ±(°C)	Uniformity (°C)	Uncertainty ±(°C)
121.0	121.4	211.0	Position 1	121.59	0.20	0.13	0.70
			Position 2	121.60			
			Position 3	121.52			

Standard

1) Standard Datalogger with RTD Model. HiTemp. 140-PT S/N. R32397, Certificate No. QR23-1962, Calibrated by Quality Reborn Co., Ltd., ONAC Calibration No. 0292. Due Date Aug 07, 2024.

2) Standard Datalogger with RTD Model. HiTemp. 140-PT S/N. R32398, Certificate No. QR23-1963, Calibrated by Quality Reborn Co., Ltd., ONAC Calibration No. 0292. Due Date Aug 07, 2024.

3) Standard Datalogger with RTD Model. HiTemp. 140-PT S/N. R32399, Certificate No. QR23-1964, Calibrated by Quality Reborn Co., Ltd., ONAC Calibration No. 0292. Due Date Aug 07, 2024.

This certificate is traceable to SI unit.

[redacted]

น.6/21

Thermology Co., Ltd.
96/177-96/178 Moo 6, T. La-harn, A. Bangbuathong, Nonthaburi 11110
Tel : 0 2191 6479 Fax : 0 2191 6480 website : www.thermology.co

ilac-MRA
NSC-TISI-TIS17025
CALIBRATION 0109

CALIBRATION CERTIFICATE

Date of Issue	Jun 28, 2024	**Cert No.**	24/2418
Site Calibration		**Order No.**	24060337

Customer Bureau Veritas AQ Lab (Thailand) Limited
111 Thailand Science Park
Moo 9 Paholyothin Rd., Klong 1, Klong Luang, Pathumthani 12120 Thailand

Place of Calibration Incubation Room

Description	Water Bath
Model	SC100
Serial No.	0152187501160414
ID.No.	CHM000205
Date of Receipt	Jun 24, 2024
Date of Calibration	Jun 24, 2024

Environment

Temperature	(Min)	22.8	°C	(Max)	25.2	°C
Relative Humidity	(Min)	44.1	%RH	(Max)	58.5	%RH
Line Voltage	(Min)	227.2	VAC	(Max)	229.6	VAC

Calibration Method

WI-18 : The reference thermometer was placed into the chamber and measurement was performed based on AS-2853.
The temperature scale in use at this laboratory is the International Temperature Scale of 1990.

Standard

1) Data Acquisition with Sensor Model 34972A S/N. MY49007789, Certificate No. QR24-0186, Calibrated by Quality Reborn Co., Ltd., ONAC Calibration No. 0292. Due Date Jan 23, 2025.

This certificate is traceable to SI unit.

[redacted]

This certificate is issued in accordance with the conditions of Thermology Laboratory.The traceability to recognised [redacted] unit of measurement realised at corresponding national standard laboratory.This certificate may not be reproduced other than in full except with the prior written approval of laboratory.

[redacted]

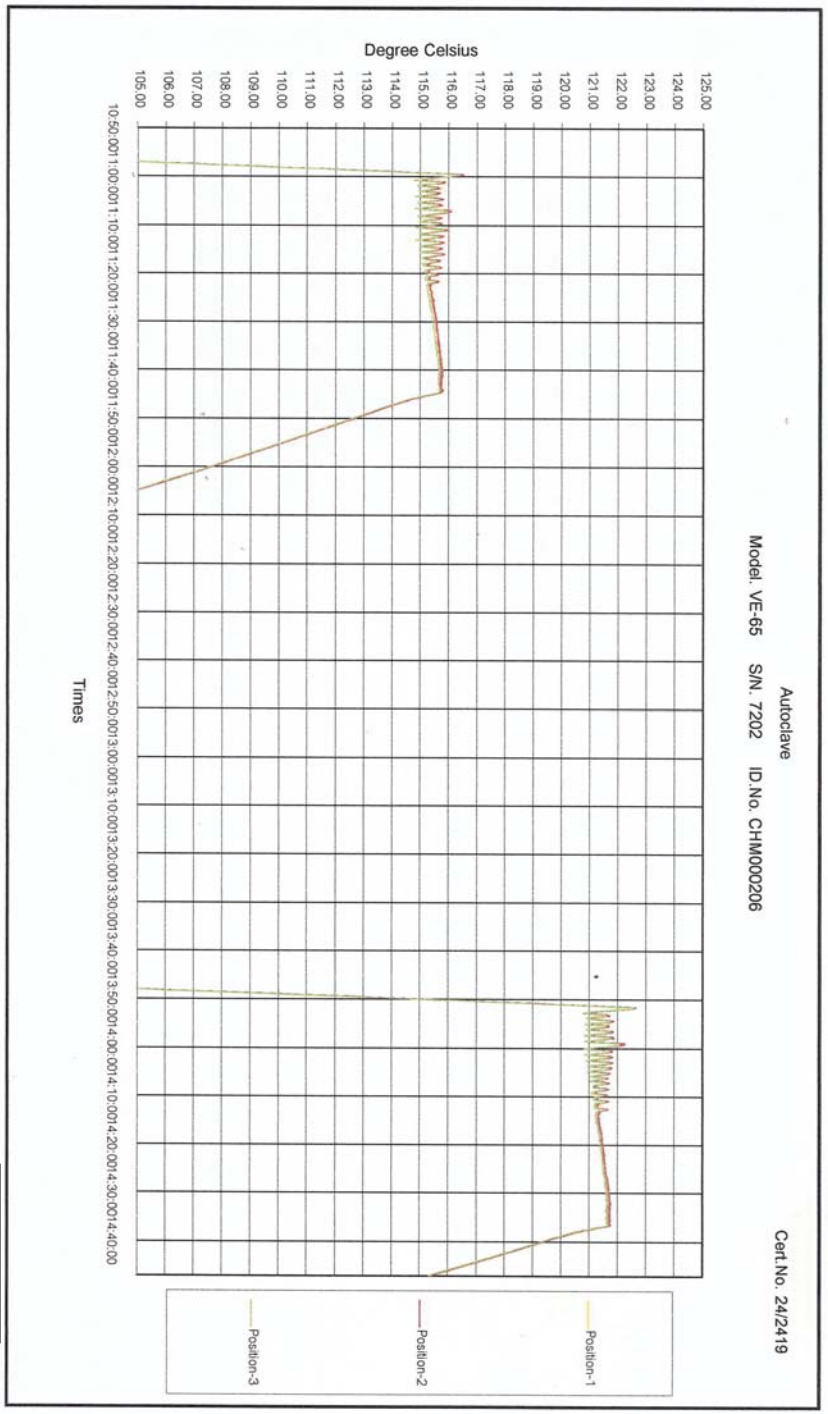

Thermology Co., Ltd.
96/177-96/178 Moo 6, T. La-harn, A. Bangbuathong, Nonthaburi 11110
Tel : 0 2191 6479 Fax : 0 2191 6480 website : www.thermology.co

ilac-MRA
NSC-TISI-TIS17025
CALIBRATION 0109

CALIBRATION CERTIFICATE

Date of Issue Jun 28, 2024 **Cert No.** 24/2418
Site Calibration **Order No.** 24060337

Results (without adjustment)

Cal Point (°C)	UUC Setting (°C)	UUC Reading (°C)	Reference Thermometer (°C)		Stability ±(°C)	Uniformity (°C)	Uncertainty ±(°C)
44.5	44.5	44.5	Position 1	44.490	0.020	0.043	0.13
			Position 2	44.494			
			Position 3	44.491			
			Position 4	44.499			
			Position 5	44.503			

The stability and uniformity was taken into account in the measurement uncertainty stated.
The above results are valid exclusively for calibration samples as mentioned in the report.
The reported expanded uncertainty is based on a standard uncertainty multiplied by a coverage factor k=2, providing a level of confidence of approximately 95%. The uncertainty evaluation has been carried out in accordance with ONAC requirements.

APPROVED SIGNATORY : [redacted]

Thermology Co., Ltd.
96/177-96/178 Moo 6, T. La-harn, A. Bangbuathong, Nonthaburi 11110
Tel : 0 2191 6479 Fax : 0 2191 6480 website : www.thermology.co

ilac-MRA
NSC-TISI-TIS17025
CALIBRATION 0109

CALIBRATION CERTIFICATE

Date of Issue Jun 28, 2024 **Cert No.** 24/2418
Site Calibration **Order No.** 24060337

Results (without adjustment)

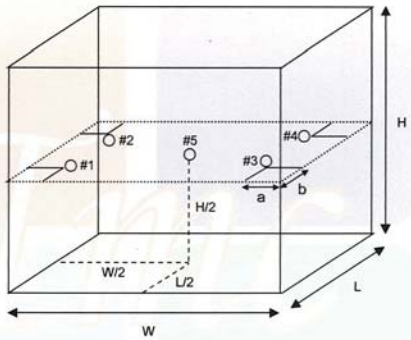

Position of reference thermometers were placed

Note.

1). Dimension (W x L x H) is 30 x 34 x 20 cm.

2). Stability - greatest one half of difference between max peak and min peak of each reference probe measured temperature obtained during the calibration interval.

3). Uniformity - the maximum difference of measured temperatures at any sensors and the measured temperature at the reference location which are observed at the same time or at as close an observation time as possible to determine the temperature pattern or homogeneity within the chamber under steady state conditions. The reference sensor should preferably be located at the geometric center of the chamber.

[redacted]

4.6/23

Thermology Co., Ltd.
96/177-96/178 Moo 6, T. La-harn, A. Bangbuathong, Nonthaburi 11110
Tel : 0 2191 6479 Fax : 0 2191 6480 website : www.thermology.co

ilac-MRA
NSC-TISI-TIS17025
CALIBRATION 0109

CALIBRATION CERTIFICATE

Date of Issue	Jun 28, 2024	**Cert No.**	24/2415
Site Calibration		**Order No.**	24060337

Customer Bureau Veritas AQ Lab (Thailand) Limited
111 Thailand Science Park
Moo 9 Paholyothin Rd., Klong 1, Klong Luang, Pathumthani 12120 Thailand

Place of Calibration Incubation Room

Description	Incubator
Model	IN110
Serial No.	D415.0797
ID.No.	CHM000181
Date of Receipt	Jun 24, 2024
Date of Calibration	Jun 24, 2024

Environment

Temperature	(Min)	22.8	°C	(Max)	25.2	°C
Relative Humidity	(Min)	44.1	%RH	(Max)	58.5	%RH

Calibration Method

WI-17 : The reference thermometer was placed into the chamber and measurement was performed based on AS-2853.
The temperature scale in use at this laboratory is the International Temperature Scale of 1990.

Standard

1) Data Acquisition with Sensor Model 34972A S/N. MY49010059, Certificate No. QR24-0874, Calibrated by Quality Reborn Co., Ltd., ONAC Calibration No. 0292. Due Date Apr 24, 2025.

This certificate is traceable to SI unit.

[redacted]

This certificate is issued in accordance with the conditions of Thermology Laboratory.The traceability to recognised national standard and the unit of measurement realised at corresponding national standard laboratory.This certificate may not be reproduced other than in full except with the prior written approval of laboratory.

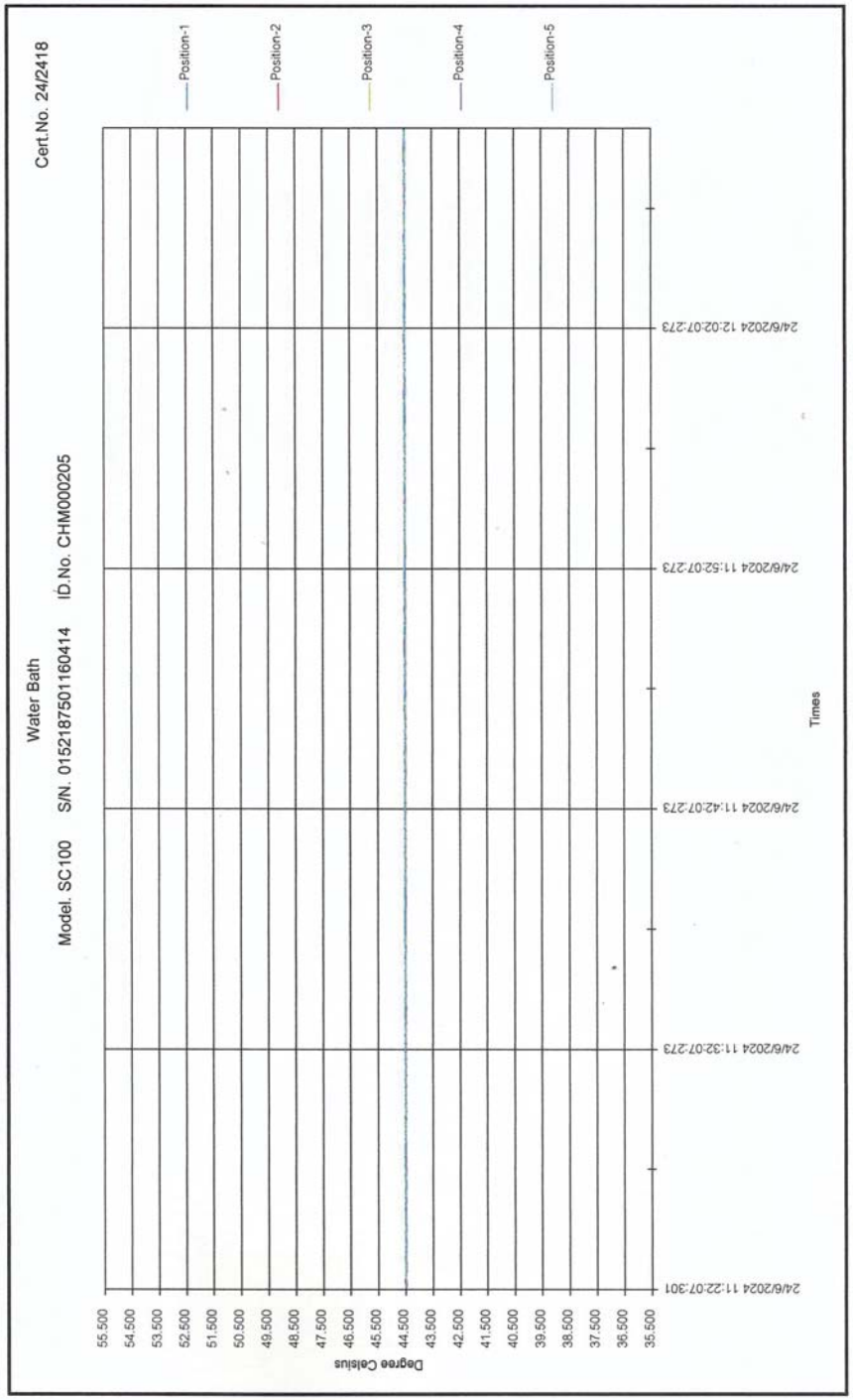

24/9/n

Thermology Co., Ltd.
96/177-96/178 Moo 6, T. La-harn, A. Bangbuathong, Nonthaburi 11110
Tel : 0 2191 6479 Fax : 0 2191 6480 website : www.thermology.co

ilac-MRA
NSC-TISI-TIS17025
CALIBRATION 0109

CALIBRATION CERTIFICATE

Date of Issue Jun 28, 2024 **Cert No.** 24/2415
Site Calibration **Order No.** 24060337

Results (without adjustment)

Cal Point (°C)	UUC Setting (°C)	UUC Reading (°C)	Reference Thermometer (°C)		Stability ±(°C)	Uniformity (°C)	Uncertainty ±(°C)
35.0	35.0	35.0	Position 1	35.138	0.067	0.253	0.30
			Position 2	35.099			
			Position 3	35.075			
			Position 4	35.187			
			Position 5	35.173			
			Position 6	34.988			
			Position 7	34.878			
			Position 8	34.965			
			Position 9	34.970			

The stability and uniformity was taken into account in the measurement uncertainty stated.
The above results are valid exclusively for calibration samples as mentioned in the report.
The reported expanded uncertainty is based on a standard uncertainty multiplied by a coverage factor k=2, providing a level of confidence of approximately 95%. The uncertainty evaluation has been carried out in accordance with ONAC requirements.

APPROVED SIGNATORY : [redacted]

Thermology Co., Ltd.
96/177-96/178 Moo 6, T. La-harn, A. Bangbuathong, Nonthaburi 11110
Tel : 0 2191 6479 Fax : 0 2191 6480 website : www.thermology.co

ilac-MRA
NSC-TISI-TIS17025
CALIBRATION 0109

CALIBRATION CERTIFICATE

Date of Issue Jun 28, 2024 **Cert No.** 24/2415
Site Calibration **Order No.** 24060337

Results (without adjustment)

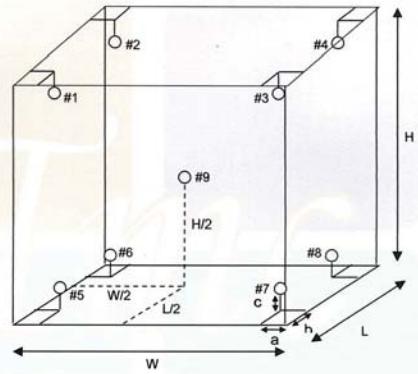

Position of reference thermometers were placed

Note.

1). Dimension (W x L x H) is 56 x 40 x 48 cm.

2). Stability - greatest one half of difference between max peak and min peak of each reference probe measured temperature obtained during the calibration interval.

3). Uniformity - the maximum difference of measured temperatures at any sensors and the measured temperature at the reference location which are observed at the same time or at as close an observation time as possible to determine the temperature pattern or homogeneity within the chamber under steady state conditions. The reference sensor should preferably be located at the geometric center of the chamber.

[redacted]

4.6/25

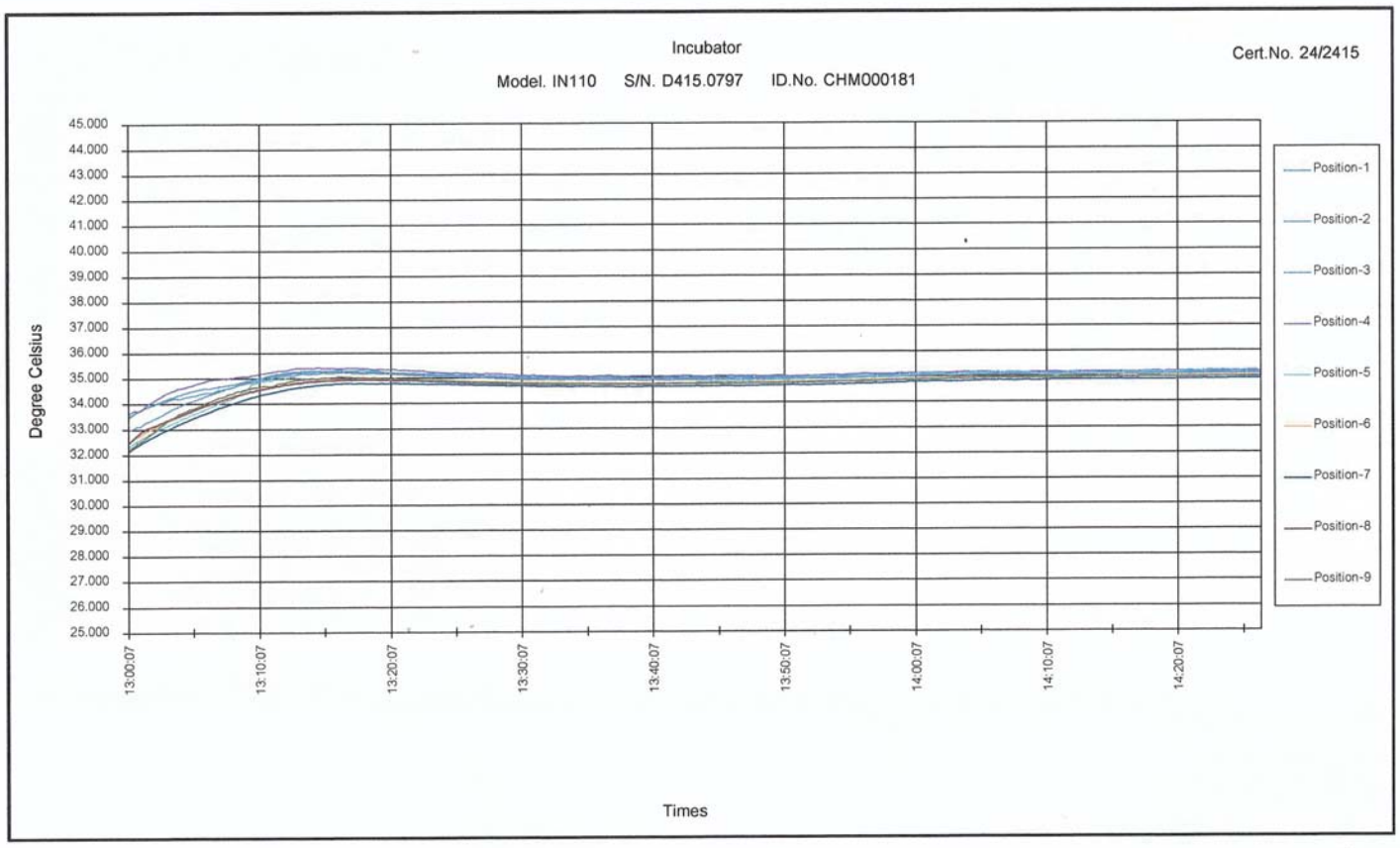
Incubator
Cert.No. 24/2415
Model. IN110 S/N. D415.0797 ID.No. CHM000181
Degree Celsius
45.000
44.000
43.000
42.000
41.000
40.000
39.000
38.000
37.000
36.000
35.000
34.000
33.000
32.000
31.000
30.000
29.000
28.000
27.000
26.000
25.000
13:00:07
13:10:07
13:20:07
13:30:07
13:40:07
13:50:07
14:00:07
14:10:07
14:20:07
Times
Position-1
Position-2
Position-3
Position-4
Position-5
Position-6
Position-7
Position-8
Position-9

[redacted]